http://ammtiac.alionscience.com/quarterly

AMMTIAC

QUARTERLY
Volume 5, Number 4
2010

POLYMER MATRIX COMPOSITES

AMMTIAC is a DoD Information Analysis Center Sponsored by the Defense Technical Information Center

http://ammtiac.alionscience.com/quarterly

Energy and Materials

Increased emphasis has been and continues to be placed on attaining energy independence within the United States, both for the general populus and for its military. With calls for a reduced dependence on petroleum products, decreased greenhouse gas emissions, and increased renewable energy usage, research and development efforts have not only increased in numbers, but also in intensity. Although energy from biomass, water, wind, and the sun has been harvested for thousands of years, it wasn't until the 1940s and 50s that many began to design and implement technologies to convert the energy from each of these sources into electricity. With the growing call for energy independence, researchers must find methods to optimize these technologies and create new and improved manufacturing processes.

In the news, we most frequently hear about ethanol and solar and wind power. However, these are not the only research areas, and they are surely not the only means for solving the energy independence problem. Current R&D efforts are not specifically focused on one topic because there are numerous avenues that can lead to the realization of solutions. Even though many would like for one technology to solve the entire energy crisis, it is nearly impossible. The US populus is too dependent upon energy and its various forms. Thus, multiple solutions are needed.

In addition to solving the energy problem – or petroleum dependence problem – we must also find improved waste disposal methods as well as methods to encourage energy conservation. With recycling efforts gaining momentum, many post-consumer products can be re-used. However, with continued population increases there are ever increasing amounts of waste that must be disposed. The most used waste disposal method is landfilling. To promote energy conservation, almost everything we use needs to be made more efficient, and a new "energy conservation" mindset needs to be developed. Efficiency has become a major driver in production in recent years since manufacturing processes need to be made more environmentally friendly and more efficient to survive. This is being done through the use of Six Sigma and Lean Six Sigma at many locations. These are just a few of the problems that need to be solved, problems with thousands of solutions.

As the quest for solutions continues, some research areas are gaining increased attention. One such area is materials research. Many of the advancements in wind and solar energy were the result of improved materials. Materials researchers are also responsible for discovering methods by which post-consumer materials can be re-used or recycled. And this is just the tip of the iceberg. Recently, in the aircraft and automobile industries, an emphasis has been placed on making planes and cars lighter weight, thus improving fuel economy and reducing emissions. This has been accomplished through the increased use of polymer matrix composites (PMCs) versus metals and metal matrix composites.

However, as PMCs grow in popularity and use, they will be expected to continuously meet ever increasing design requirements. Polymer matrix composites will have to be lighter and cheaper while offering the same if not enhanced material characteristics. As these materials become increasingly important, it becomes even more important to have a basic understanding of the materials, their failure mechanisms, and the methods by which quality improvements can be realized.

This themed issue of the *AMMTIAC Quarterly* focuses on this important class of materials and these important topics. The feature article discusses the development and successful implementation of glass fiber-reinforced thermoplastic composite lumbers, which have been used to solve timber bridge degradation issues. These recyclable lumbers are not only made from waste materials, but they are also eco-friendly and support the notion of sustainable development. *TechSolutions 18* provides an overview of the common polymer matrix composite material defects that result from their manufacture. Lastly, the third article shows how nondestructive evaluation methods can be utilized to improve the quality of polymer matrix composites during their fabrication. With product quality improvements, energy requirements decrease resulting in a more environmentally friendly production process.

Stephanie Knoeller, Editor

A note to our readers:
We recently received notification that misleading information was published in *TechSolutions 16* of *AMMTIAC Quarterly* Volume 5 Number 2. In this article, we cite that AET is sensitive to damage growth and that it is capable of detecting defects on a picometer scale. Although AET does detect damage growth, its capabilities to detect this growth are limited by the amount of energy released by a particular material during damage growth, the type of damage, the distance from the sensor to the damage, and the level of ambient noise. In controlled, laboratory settings AET has been able to detect micrometer sized defects in polymer matrix composites and metals. Thus, in practical engineering structures, AET will be less sensitive due to background noise and sensor spacing. *If you downloaded this issue after the release of* AMMTIAC eNews *No. 22 (11/11/2010), the information is correct. This note applies to our print subscribers and those who downloaded the issue prior to the* eNews *release.*

Editor-in-Chief
Stephanie L. Knoeller

Publication Design
Cynthia Long

Copy Editor
Perry Onderdonk

Information Processing
Caron Dibert

Inquiry Services
Owen R. Conniff

Product Sales
Gina Nash

The AMMTIAC Quarterly *is published by the Advanced Materials, Manufacturing, and Testing Information Analysis Center (AMMTIAC). AMMTIAC is a DoD-sponsored Information Analysis Center, administratively managed by the Defense Technical Information Center (DTIC). Policy oversight is provided by the Office of the Secretary of Defense, Director of Defense Research and Engineering (DDR&E). The* AMMTIAC Quarterly *is distributed to more than 18,000 materials, manufacturing, and testing professionals around the world.*

Inquiries about AMMTIAC capabilities, products, and services may be addressed to:

Micheal J. Morgan
Director, AMMTIAC
PHONE: 937.431.9322 x103
EMAIL: ammtiac@alionscience.com
URL: http://ammtiac.alionscience.com

We welcome your input! To submit your related articles, photos, notices, or ideas for future issues, please contact:

AMMTIAC
ATTN: MRS. STEPHANIE L. KNOELLER
201 Mill Street
Rome, New York 13440
PHONE: 315.339.7136
FAX: 315.339.7107
EMAIL: ammtiac@alionscience.com

US Army Builds Degradation Resistant Bridges

Richard G. Lampo
James Wilcoski
Vincent F. Hock
Sarah B. Nemeth
ERDC-CERL
Champaign, IL

Henry Diaz-Alvarez
ERDC-GSL
Vicksburg, MS

Dr. Thomas J. Nosker
Rutgers University
Piscataway, NJ

INTRODUCTION

With hundreds of bridges in its inventory, the US Army spends a substantial portion of its budget performing periodic maintenance operations, repairing, and rebuilding degraded bridges. Especially in hot and humid environments, degradation rates for wood timber bridges increase due to rot and insect attack. In fact, it is not uncommon for bridges of all types to receive reduced load ratings or close as a result of material degradation. Although chemically-treated wood provides lifespan advantages over untreated wood, it is disadvantageous because it may leach harmful chemicals into the soil and groundwater and require special permits upon disposal.

To counter these surmounting, degradation-related bridge repairs and rebuilds, a cost-effective, structural-grade, wood lumber alternative was developed. The structural capabilities of the developed glass fiber-reinforced thermoplastic composite lumber have been demonstrated in the replacement of an existing wood timber bridge at Camp Mackall (a sub-installation of Fort Bragg), North Carolina. This article highlights the material development and its implementation at Camp Mackall.

GLASS FIBER-REINFORCED THERMOPLASTIC COMPOSITE LUMBER

Development and Production

Glass fiber-reinforced thermoplastic composite lumbers are produced using a unique, immiscible polymer blending, extrusion, and molding process that creates a material with the flexibility of high-density polyethylene (HDPE) and the stiffness and strength of fiberglass. The immiscible polymer blending process combines post-consumer recycled HDPE and automotive bumper scraps (made of polypropylene and fiberglass) in a manner that specifically orients the glass fibers, creating a product with properties that exceed those predicted by the law of mixtures for the individual materials. This mixture is then pushed through a screw and barrel extruder.

The specialized extrusion process uses 11% fiberglass but produces a product equivalent in strength to that of a material containing 34% fiberglass. This low fiberglass content is critical since fiberglass is both difficult to dispose of and irritating to the skin. The extruded material is then pushed into a mold to create the product lumber. The molding process allows the product lumber to be produced in a variety of cross-sectional geometries and lengths. Thus, products can be produced with different moments of inertia (I), and the flexural rigidity (modulus of elasticity (E) x I) of the member can be adjusted to achieve the desired mechanical properties and performance.[1]

The resulting composite has a rough, no-slip, grain-like surface, specific strength greater than steel, and high creep* resistance. This high creep resistance results from the material design, which incorporates 600 psi of allowable tensile, compressive, and flexural stress. This value is well below the tested minimum ultimate strength. In other words, if a tank were to be parked on a bridge constructed of this material for 25 years, once driven off the bridge would return to its original shape with inconsequential residual deformation.

The glass fiber-reinforced thermoplastic composite lumber, which incorporates small quantities of foaming agents and other additives – to reduce the occurrence of voids and increase creep resistance – has a modulus of elasticity between 350,000 and 400,000 psi (2,410-2,760 MPa) and a minimum ultimate strength of 3,500 psi (24 MPa). Comparatively, virgin high-density polyethylene has an elastic modulus and ultimate strength of 160,000 psi (1,100 MPa) and 3,500 psi (24 MPa), respectively.[2] Pine and oak,

Table 1. Advantages of Glass Fiber-Reinforced Thermoplastic Composite Lumber.

- Does not leach harmful chemicals
- Lasts more than 50 years with minimal to no maintenance
- Resistant to ultraviolet light – degradation rates are less than 0.003 inch (0.07 mm) per year
- Carbon pigment (a natural compound) can be added to the lumber to reduce the effects of ultraviolet light
- Can withstand temperature extremes greater than those observed at any one location on the Earth's surface, since it melts and freezes at 125°C (257°F) and -125°C (-193°F), respectively
- Impermeable to water and chlorides
- Resistant to the abrasion that can occur in marine environments due to salt and sand
- Does not biodegrade or oxidize
- Insect and rot resistant
- Retains key mechanical properties in humid and wet environments
- Construction operations utilize the same tools as required for timber bridges
- High energy absorption capacity
- Safe from catastrophic failure due to the ductility of the materials
- Diverts HDPE and fiberglass from landfills where they take thousands of years to decompose
- When used as a bridge construction material, short payback periods and high returns on investment are realized

http://ammtiac.alionscience.com/quarterly

Figure 1. **The original wood timber bridge located at Camp Mackall, NC. This bridge was replaced with a bridge constructed of fiber-reinforced thermoplastic composite lumber.**

the two most common sources for wood lumber, have moduli of elasticity that exceed 1 million psi (6,900 MPa) and strengths of 2,400 psi (17 MPa) and 3,500 psi (24 MPa), respectively, when measured along the growth axis.[3]

Accelerated weather tests have demonstrated that this lumber has an estimated lifespan that exceeds 50 years and requires little maintenance. Table 1 lists the advantages of glass fiber-reinforced thermoplastic composite lumber over chemically-treated wood lumber.

Structural Application Demonstration

An opportunity to demonstrate and validate the performance and benefits of the glass fiber-reinforced composite lumber was offered in 2008 as a part of the Deputy Under Secretary of Defense's Corrosion Prevention and Control (CPC) Program and the Army Chief of Staff for Installation Management's (ACSIM's) Installation Technology Transition Program (ITTP).

Innovative I-beam Bridge at Fort Bragg, NC

The original goal of the effort at Fort Bragg, North Carolina was to build and evaluate a glass fiber-reinforced thermoplastic composite bridge that could be implemented as a cost competitive replacement for conventional wood timber bridges. A replacement bridge was proposed by the US Army Engineer Research and Development Center (ERDC), Construction Engineering Research Laboratory (CERL) with an American Association of State Highway and Transportation Officials (AASHTO) load rating of HS-20. However, the Fort Bragg Directorate of Public Works (DPW) turned around and challenged ERDC-CERL to design and build a bridge that could support a 71-ton (64,400kg) M1A1 Abrams tank (AASHTO HS-25), while remaining cost competitive with a traditional wood timber bridge on a first cost basis. Figure 1 shows the original wooden bridge at Camp Mackall that was replaced using glass fiber-reinforced thermoplastic composite lumber. This degraded timber bridge had a 4.7 ton (4,300 kg) load rating.

To meet the challenge, engineers designed a thermoplastic composite bridge using traditional timber design methodologies but with slight modifications. The most considerable modification was the use of lower allowable stresses for the thermoplastic composite materials. Table 2 provides the material properties for the glass fiber-reinforced thermoplastic composite lumber, as well as the values that were actually used in the design of this bridge.

The final bridge design utilized the I-beam concept, which supports the removal of any material that does not contribute to the beam's strength, thus reducing the material costs. The bridge deflection‡ (or bending) is controlled through the use of I-beams that have large moments of inertia. Likewise, these I-beams enable the bridge to support large loads, while staying within the AASHTO safety limits.

This 36-foot (11-m) long bridge was built using 12-inch (305-mm) diameter pilings, heavy-duty I-beams, up to 18-inches (460-mm) high, and decking, all made from the glass fiber-reinforced thermoplastic composite material. Figure 2 shows an I-beam pile cap covering a series of piles. Stainless steel and other corrosion

Table 2. **Design Values for Thermoplastic Composite Bridges.[4]**

Elastic Modulus for live load (short duration)	E = 350 ksi (2,400 MPa)
Ultimate compression parallel to grain†	F'c =3,500 psi (24 MPa)
Allowable compression parallel to grain†	F'c =1,000 psi (6.89 MPa)
Ultimate flexural strength	F'b =2,300 psi (15.9 MPa)
Allowable flexural strength	F'b =600 psi (4.1 MPa)
Ultimate shear strength parallel to grain†	F'v =1,100 psi (7.58 MPa)
Allowable shear strength parallel to grain†	F'v =350 psi (2.4 MPa)
Self weight	ωp =0.032 pci (8,686 N/m^3)
Coefficient of thermal expansion	ε = 0.000052/°F (2.88889E-05/°C)

Thermoplastic Composite Lumber Demonstration Bridge at Fort Leonard Wood

The first composite, vehicular bridge was built at Fort Leonard Wood, Missouri during the summer of 1998. This bridge is constructed of standard and structural-grade, thermoplastic composite lumber, and can support more than 30 tons (27,000 kg).

Structural-grade composite lumber boards, incorporating polystyrene for added stiffness rather than fiberglass, were used as the main support joists. These joists were placed over the steel girders that provided support to the original timber bridge. The deck was constructed using unreinforced, standard-grade plastic lumber. The figure shows an Army High Mobility Multipurpose Wheeled Vehicle (HMMWV) crossing the plastic lumber bridge.

The construction of this bridge diverted approximately 13,000 pounds of post-consumer plastics or 78,000 1-gallon plastic milk jugs, and 335,000 8-ounce polystyrene-containing foam coffee cups from landfilling operations. In addition, because there were minimal maintenance costs, this bridge was able to pay for itself in less than eight years.

Although successfully constructed, this bridge had higher initial costs compared to treated wood.

http://ammtiac.alionscience.com/quarterly

Figure 2. **Construction of thermoplastic composite bridge at Fort Bragg.**

resistant bolts and screw fasteners were used in the construction of this bridge. After the pilings were driven in, only two workers were required to finish the project.[1] This ten-week bridge construction effort was completed in May 2009.

This bridge is constructed of more than 94% recycled material, which means approximately 85,000 pounds of HDPE or 550,000 1-gallon plastic milk jugs were diverted from landfills. In addition, this bridge provides minimal risk in terms of catastrophic failure since it was built and designed to have a working stress that does not exceed 15% of the ultimate strength of the individual materials. Also, because the materials are ductile in nature, they will exhibit visible signs prior to failure. Comparatively, steel and concrete bridges are built to have working stresses that are 40-60% and 33% of their ultimate strengths, respectively.[1]

Testing and Economic Analysis

On 11 June 2009, initial load tests were conducted using a 36-ton dual axle dump truck and an M1A1 Abrams tank. With the 36-ton (32,700 kg) dump truck, the deflection at mid-span was 0.216 inches (5.49 mm), including pier deflections. With the M1A1 Abrams tank (Figure 3), the mid-span deflection, including pier deflections, was 0.525 inches (13.3 mm).

Table 3 highlights the stresses and strains experienced by the bridge during these initial load tests. After analysis of these initial results, this bridge received a posted load capacity of 73 tons (66,225 kg) for tracked vehicles and 88 tons (79,833 kg) for wheeled vehicles.

Table 3. **11 June 2009 Load Test Results.**

	Dump Truck	M-1 Abrams Tank
Micro $Strain_{Max}$ (10^6)	637	740
$Stress_{Max}$ (psi)	255	296
Modulus of Elasticity (ksi)	450	

An economic analysis was performed to compare lifecycle costs for thermoplastic composite designed bridges, treated wood timber bridges, and hybrid concrete, steel and wood design bridges. Where possible, data was collected from actual bridge constructions. The compiled costs were normalized to account for cost differences due to locality and the estimated HS ratings of the bridges. A net present value (NPV) discount factor of 3% was used in the analysis covering a time period of 30 years. The analysis also took into consideration that a wood timber structure would need to be replaced at least once during the life expectancy of the thermoplastic composite bridge. The thermoplastic composite bridge design proved to be cost competitive with a treated wood bridge on a first-cost basis. In addition, with its very low maintenance expectation over the NPV lifecycle, the thermoplastic composite bridge design shows an estimated $300 per square foot lifecycle cost savings compared to conventional wood timber bridge designs and their associated maintenance costs (Table 4).

Remote Sensing and Monitoring

Sensors were added to the bridge at Camp Mackall to monitor the strains and deflections, temperature, weather, and ultraviolet radiation. More than twelve displacement gauges measure the deflection and displacement of the bridge under load, and during temperature changes, to an accuracy of 0.01 inches (0.25 mm). Ten resistance-type strain gauges measure the strain within a range of ±3,000 micro-strain. These gauges compensate for temperature and humidity effects as necessary to provide accurate strain readings.

Temperature is measured at sixteen different locations that correspond to the installed locations of the displacement and strain gauges. These gauges determine the temperature at specific

Figure 3. **M1A1 Abrams tank crossing the bridge during initial load testing.**

Table 4. **Bridge construction material lifecycle cost comparison.[5]**

Material	N P V Lifecycle Costs	Expected Life
Wood Timber Bridge	$981 / square foot	15-20 years w/annual maintenance
Hybrid Bridge (steel and concrete with laminated wood deck)	$1,101 / square foot	30+ years w/annual maintenance & future complete deck replacement
Thermoplastic Composite Bridge	$675 / square foot	50+ years, minimal maintenance

http://ammtiac.alionscience.com/quarterly

locations, and the temperature gradients that exist over the bridge to an accuracy of 0.1°F. An image capture system records digital images of all vehicles that cross the bridge. Time and date stamps are placed on the recorded images so that the data can be correlated to the respective load condition.

A weather station has also been installed near the bridge to accurately report the temperature, wind speed, precipitation, relative humidity, and ultraviolet radiation intensity at the bridge site. The atmospheric corrosion is assessed using test coupons made of silver, copper, steel, and aluminum alloys. These coupons are removed every three months and their mass loss analyzed. Test coupons of the glass fiber-reinforced thermoplastic composite have also been installed to monitor the effects of the environment on the bridge.

The sensors are connected to a data recording system that can store output data for a minimum of 14 days. During a load event, data are collected for the duration. The data collected are remotely transmitted to a computer for data analysis, or to provide an alert should an overload condition, failed component, or failed sensor or gauge be detected.

Recent Testing

Additional load tests were conducted in August 2010 using an approximate 17-ton wheeled M1089 Wrecker and a 70-ton tracked M88A2 Heavy Recovery Vehicle. Initially, the vehicles were driven over the bridge at very slow speeds, stopping at the point of maximum deflection. After five minutes, the vehicle was driven off with recovery observed. The vehicles were then driven over the bridge at increasing speed increments up to 25 mph to observe the effects of vehicle speed on the bridge response. The deflections were within the expected values, and there were no indications of creep or material structural degradation based on previous load tests conducted during September 2009 and January 2010. A future load test is planned for July 2011.

CURRENT STATUS

Other Army installations have expressed interest in using thermoplastic construction materials and bridge designs to replace existing wood timber bridges. In addition, the Fort Bragg DPW has provided funds for the construction of a third fiber-reinforced thermoplastic composite bridge at Camp Mackall.

CONCLUSION

The innovative thermoplastic composite I-beam bridge at Camp Mackall has demonstrated that glass fiber-reinforced thermoplastic composite lumbers are viable, cost-competitive alternatives to traditional treated-lumber products. These materials can be used in the replacement of many of the degraded wood timber bridges in use throughout the US, both on and off military installations.

GENERAL REFERENCES

Jackson, L.M., and T.J. Nosker, "Technology, Applicability, and Future of Thermoplastic Timber," *Proceedings of the DoD Corrosion Conference 2009*, August 2009.

Lampo, R.G., S.C. Sweeny, J. Wilcoski, V.F. Hock, V.P. Chiarito, H. Diaz-Alvarez, and T.J. Nosker, "Thermoplastic Composites as Degradation-Resistant Material Systems for Timber Bridge Designs," *Proceedings of the DoD Corrosion Conference 2009*, August 2009.

NOTES & REFERENCES

* Creep is the slow, permanent deformation of a material that occurs over time as a result of prolonged external loads or stresses below the elastic limit. Creep is influenced by load magnitude, the duration of the applied load, and temperature.

† For the flow molded thermoplastic composite members, grain is considered to be the direction of material flow in the mold during fabrication.

‡ Deflection describes the degree to which a structural element is displaced under a load.

[1] Jackson, L.M., and T.J. Nosker, "Technology, Applicability, and Future of Thermoplastic Timber," *Proceedings of the DoD Corrosion Conference 2009*, August 2009.

[2] "Encyclopedia 1996," *Modern Plastics*, Vol. 72, No. 12, 1995, pp. B-185, B-186.

[3] The Forest Products Laboratory, *Wood Handbook*, US Department of Agriculture Forest Service, Agriculture Handbook No. 72, 1955 (rev. 1987).

[4] Lampo, R.G., S.C. Sweeny, J. Wilcoski, V.F. Hock, V.P. Chiarito, H. Diaz-Alvarez, and T.J. Nosker, "Thermoplastic Composites as Degradation-Resistant Material Systems for Timber Bridge Designs," *Proceedings of the DoD Corrosion Conference 2009*, August 2009.

[5] Draft ERDC/CERL Technical Report, "Demonstration of Thermoplastic Composite I-Beam Design Bridge at Camp Mackall, NC" to be published in early 2011.

To comment on this article, email: ammtiac@alionscience.com

http://ammtiac.alionscience.com/quarterly

Stephanie L. Knoeller
AMMTIAC
Rome, NY

Polymer Matrix Composite Manufacturing Induced Defects

INTRODUCTION

Polymer matrix composites (PMCs) comprise more than 90% of the composite materials available. They are used extensively within industry and the DoD due to their high stiffness and strength, low density, long fatigue life, corrosion resistance, and crash worthiness.[1, 2] These materials can also be tailored to exhibit stealth characteristics, sensor capabilities, and high thermal or electrical conductivity.[3]

With many desirable properties, the potential applications for PMCs continue to increase. As a result, it is becoming ever more important to know, and have a basic understanding of, the underlying causes for polymer matrix composite (PMC) material failure, specifically those that result from the manufacturing process since it accounts for approximately 44% of the failures in [fiber-reinforced] PMCs.[4] These failures result from defects that are inherently introduced during the manufacturing process, either from the reactions that occur within the resin during material processing, or via mechanical, human, or environmental factors. This article surveys the common defects that result from the manufacture of PMCs.

BACKGROUND

Polymer matrix composites consist of matrices made of polymeric materials*, such as plastics† or resins‡ that are either thermosetting or thermoplastic, and fibrous reinforcements.[1] The reinforcements (e.g., natural, oxide glass, aramid, or carbon or graphite fibers) can be placed in any direction and used in a variety of shapes and sizes (i.e., straight and continuous; discontinuous or chopped; particles or flakes; or continuous and woven, braided, or knitted).[2] The continuous matrix provides form to the much stiffer and stronger reinforcements, distributes loads across the reinforcements, and protects the reinforcements from the environment and weathering.[1, 2]

Thermosetting resins are liquid at room temperature. As the name implies, thermosetting resins solidify with heat in a process known as curing. The heat from the curing process creates cross links between the single and branched polymer chains of the resin to create a solid 3-dimensional (3-D) structure. Since voids are inherently introduced during the cure process, PMCs are typically debulked§ to reduce the void content.[1] Once cured, the component is cooled to its service temperature.[1, 5]

Thermoplastic resins, on the other hand, are solid at room temperature.[1] These resins are heated to a processing temperature above the melting point, molded, and solidified upon cooling to the service temperature.[6] This cooling process causes the matrix to shrink, creating Van der Waals bonds between the fibers and the matrix.[9] Table 1 compares the common attributes of thermoset and thermoplastic matrices. Table 2 provides an overview of the basic PMC manufacturing methods.

Table 1. Comparison of thermoplastic and thermoset matrices.[2, 5]

Thermoset Resins	Thermoplastic Resins
• Develop well-bonded 3-D structures • Do not melt once hardened • Require a curing process Uncured resins are susceptible to moisture and temperature effects, and contamination Under-cured resins are too soft to transmit loads efficiently between the matrix and the fibers Over-cured resins become embrittled and crack prematurely • Can be left in a partially cured state • Most often used in chopped fiber composites • Examples: Epoxies, unsaturated polyesters, phenolics, vinylesters, bismaleimides • Commonly used for aircraft, space, military, and automotive parts • Produced by condensation polymerization or by addition polymerization, followed by a condensation rearrangement reaction to form heterocyclic entities Both produce water, making it difficult to produce void-free parts or structures	• 1-D or 2-D in molecular structure • Soften at high temperatures, showing a discrete melting point • Become rigid with cooling • Examples: polyethylenes, polyesters, polyketones, polysufones, polypropylenes, polyamides • Can be crystalline or amorphous • Creep is a concern, but can be minimized with the proper reinforcement selection • No chemical reactions are needed, thus no excess heat or product gas are released • The limiting factors in production are time to heat, shape, and cool • Materials can be salvaged and re-worked • Lose strength at high temperatures

http://ammtiac.alionscience.com/quarterly

Table 2. Overview of the basic polymer matrix composite manufacturing methods. These methods apply to both resin types; however, different considerations must be included for each.[1, 2, 7, 8]

Manufacturing Method	Description
Hand Lay-up	Reinforcing fibers are placed in the mold (after a release film and gel coat in some instances); the resin material is then rolled into the reinforcing fibers. Hand lay-up is commonly used in the US aircraft industry to produce PMC parts.
Spray Lay-up	The reinforcements are chopped and sprayed simultaneously with the resin into the mold. A roller is then used to ensure that the resin fully wets the fiber bundles. This technology produces low specific strength structures and is used to join back-up structures to composite face sheets on composite tools.
Manual Prepreg** Lay-up	The prepreg is cut into several layers, as needed for the mold. The shaped prepregs are then layered within the mold.
Automatic Prepreg Lay-up	(Applicable to flat panels or parts with moderate curves.) A tape-laying machine lays the prepreg in the mold, cutting the prepreg when the mold edge is reached. This process is repeated until the part is complete.
Compression Molding	A specific amount of uncured resin and reinforcement are placed into the cavity of a matched mold in the open position. As the mold is closed, the pressure increases, causing the mold to fill and the part to form. This method may be used with prepregs also.
Liquid Composite Molding (LCM)	LCM processes include Resin Transfer Molding (RTM), Structural Reaction Injection Molding (SRIM), and Injection Compression Molding. A fiber preform is placed in the mold cavity and a polymeric resin is injected into the sealed mold. A curing reaction is initiated; the part solidifies and is then removed from the mold. Since LCM has a very high, non-recurring tooling cost, it is best suited for high production volumes to lower the cost.
Vacuum-Assisted RTM	The resin is injected into a mold that contains the reinforcement using pressure that is applied by the atmosphere against an evacuated system.
Resin Film Infusion	The resin film is placed in the bottom of the mold. Heat and pressure are then applied, causing the resin viscosity to decrease and spread through the preform.
Expansion RTM	A material that expands when heated is placed in the preform. The resin is infused and the mold is heated, causing the core material to expand and subsequently forcing the resin into the remaining parts of the preform.
Transfer Molding	Similar to compression molding, but the mold is closed when the resin material is injected.
Filament Winding	Fiber spools are mounted to a creel; the strands from each spool are combined and pulled through a resin bath. The strands are then fully activated with an initiator or hardener and the excess resin is removed. Lastly, they are sent through a drying device and wound onto a mandrel, forming the desired part. Filament winding is used more extensively to manufacture composites than all other lay-up methods combined.
Fiber Placement	Similar to filament winding, but enables all axes of motion.
Pultrusion	Continuous fibers are drawn from reels, formed into a general shape, and drawn through a resin bath. The wetted fibers are then shaped as they converge toward a heated die, where curing occurs. Upon die exit, the formed part enters a pulling system, which provides the force that pulls the materials through the entire system. The pultruded part is then cut and trimmed to the desired size.
Thermoforming	Utilizes matrices that can repeatedly be softened or melted on heating and hardened or solidified on cooling, and that can provide increased fracture toughness and higher hot-wet use temperatures (thermoplastics).

PMC MANUFACTURING DEFECTS

Microcracks

Thermal stresses are created during heating and cooling operations since the matrix and reinforcements expand and contract at different rates. This behavior results from differing coefficients of thermal expansion (CTE). Often, the matrix has a greater CTE than do the fibers.[10]

When thermoplastic PMCs are cooled to their service temperature following molding, a volumetric shrinkage of the matrix occurs, exceeding that of the reinforcements. These unequal contraction rates lead to the formation of residual stresses in the fibers and surrounding matrix.[9] When the magnitude of these stresses exceeds the yield strength of the composite, interface debonding may occur, followed by the formation of microcracks (transverse cracks).[2, 6, 9, 11] Curing, on the other hand, leads to the formation of stresses within thermoset PMCs. These stresses increase with increasing temperature, leading to the formation of microcracks.

As the stresses increase, the microcracks gain width and form intricate, meandering patterns within the matrix. This propagation causes the microcrack density to rise, increasing the likelihood of delamination.[5] Delaminations that form as a result of microcracking typically occur where the microcracks meet ply interfaces, an area of increased stress concentration.[10, 12] Microcracks may also form at the leading point of a main crack, absorbing excess energy and preventing the propagation of a main crack.[1]

Experimentation has shown that unless multiple microcracks are present and a critical microcrack density has been reached, delaminations will not occur. Therefore, in practice, microcracks are often assumed to be tolerable at low densities. Nevertheless, it is critical to consider delaminations that could be induced by neighboring microcracks.[11]

Likewise, it can be a detrimental decision to ignore microcracking, as they are often the gateway to further and more disadvantageous forms of damage that lead to changes in a PMC's mechanical properties, such as reduced longitudinal stiffness and thermal expansion coefficients.[12] When a PMC containing microcracks is placed under cyclic or fatigue loading, the risk of failure increases greatly.[6]

Cracks

Cracks are generally characterized by an actual separation of the material. They are visible on opposite surfaces, extending through the thickness. Cracks propagate when the local energy is greater than that which can be absorbed.[1, 2]

Cracking is a processing defect commonly found in the gel coat of a PMC. The gel coat is a protective layer that is applied to the mold prior to reinforcement placement. Although this coat contributes minimally to the structural capability of the part, it does protect the parts. As a result, it must be able to withstand large stresses, especially during molding and demolding.[1] Demolding operations add stresses to PMC parts, especially when parts stick to their mold and require alternate methods of removal.†† When these stresses exceed the material strength, cracking occurs. To prevent sticking, gel coats are often treated with release agents which, if prepared properly, should have minimal sticking.[1]

When placed in use, structures and parts experience added stresses that can contribute to cracking as well. These stresses couple with already-present manufacturing stresses, insufficient to initiate cracks alone, and lead to the formation of cracks. Under loading, stress concentrations may be created at the intersections of matrix cracks and reinforcements.[2] The added stresses cause the cracks to travel along the edge or surface of the reinforcement, where it must break interface bonds between the reinforcement and matrix. Eventually, the load is transferred completely from the matrix to the reinforcement, which absorbs excess energy through elongation. This energy is dissipated through the formation of internal atomic cracks.[1] As stresses intensify, delaminations may occur, leading to a rapid decay in stiffness and strength and, eventually, catastrophic failure.[2]

Moisture Absorption

Composites absorb moisture through the matrix, fiber, fiber-matrix interface, porous regions, and areas where microcracking and delamination have occurred. Although matrix materials typically absorb more moisture than the reinforcements, the reinforcements do aid in moisture absorption. Water and other liquids often travel via capillary action along the reinforcement until it is absorbed by the matrix.[1]

Moisture absorption is unfavorable since it chemically alters liquid resins, lowering the glass transition temperature‡‡ and degrading mechanical properties, such as elasticity and strength. The reinforcements often act as barriers against moisture diffusion, creating additional stresses within the matrix material. Thus, moisture absorption can lead to swelling due to the restrictions. If allowed to freeze, a separation between the matrix and reinforcing materials or between the layers in a laminate can occur, leading to delaminations.[2]

To prevent moisture absorption, susceptible materials should be stored in low humidity environments. Moisture should be removed from thermoset PMCs prior to high temperature cure to prevent expansion and subsequent delamination.[2]

Temperature Effects

Changes in temperature contribute greatly to the stresses and strains experienced by PMCs. In laminates, heat can cause a free expansion of the laminate layers. If this expansion is restricted by the adjacent laminate layers due to differences in reinforcement direction, internal stresses and failure may result.[2]

At temperatures above the glass transition temperature, thermoplastic matrices can soften to a point at which they no longer efficiently transfer loads, leading to premature failure.[2, 5]

Voids/Pores§§

Voids form from the entrapment of volatile gasses, air, or non-solid foreign materials, and they are virtually incapable of transmitting structural stresses or non-radiative energy fields.[2, 12, 13]

Voids result from dissolved and absorbed water and gases on the prepreg; residual volatiles (i.e., solvents) in the resin and condensates that form during cure; the entrapment of gases during resin mixing operations; or as a result of ply bridging and wrinkling. They can also be produced from the use of improper pressure during the cure cycle, inadequate use of adhesives in bonded structures, and the improper fit of adjacent surfaces.[2] Pores often arise from inadequate wetting of the fiber by the resin or from the inadequate infiltration of fiber tows.[14]

Voids greatly affect several matrix-dominated properties including interlaminar, compressive, and transverse tensile strengths. Interlaminar strength can be reduced by nearly 7% for every 1% of voids present, up to a void content of 4%.[14] Additionally, for each 1% increase in voids, the fatigue life of a fiber-reinforced PMC is reduced by 50% and the strength by approximately 5%. These reductions in strength properties lead PMCs to be more susceptible to degradation in aggressive environments.[13] The accepted void limit in practice is between 2 and 2.5%.[2, 12]

Voids can be eliminated from the final PMC product by drying prepregs in humidity-controlled rooms prior to lamination. Pores, on the other hand, should be removed during the autoclave process since they are nearly impossible to remove from the prepreg.[13]

Inclusions

The encapsulation of solid, foreign materials often leads to physical and mechanical discontinuities within a material. Material inclusions occur most often in uncured thermoset composites that are susceptible to environmental contamination from a variety of sources, including oil, grease, and silicone-based products. Compressed air and the careless application of release agents are common sources of contamination.[2]

Although inclusions are often capable of transmitting structural stresses and energy fields, the transmission rate is noticeably different from that of the parent material. This results in internal stresses that can lead to failure.[2]

Table 3 provides a summary of the common PMC manufacturing defects discussed in this article as well as others that were not discussed.

Delamination, one of the most commonly observed failure modes in composite materials, is characterized by the separation of the fiber and matrix at their interface. Although caused by increasing stress concentrations within a composite, poor process control, poor dimensional tolerance, faulty hole-drilling procedures, and inclusions of the release film during fabrication all contribute to delaminations. Failures often occur near free edges (the region where the load is transferred from the fibers to a weak matrix), around holes at the end of bonded components, or from impact that causes separation of the components.[2]

Table 3. Summary of process-induced defects commonly encountered in PMCs.[15]

Contamination	Due to foreign particles, extraneous fibers, or pieces of plastic release film (peel ply) not being removed from prepreg surface, etc.
Undercure or Variation in Degree of Cure	Occurs if the proper temperature and/or time are not used during the cure process
Delamination or Separation of Plies within the Laminate	Due to poor consolidation and undercure in the curing operation or created during hole drilling or machining of a cured composite
Voids	Formed by entrapped air, the presence of moisture, an excessive amount of solvent, or the release of gases during the curing reaction
Resin-rich or Fiber-starved Areas	Caused by nonuniform resin distribution or flow during molding
Resin-starved Areas	Caused by an uncontrolled, or lack of, resin flow through the reinforcing layers
Fiber Misalignment	Due to misoriented fibers, deviation from the preselected layup or filament winding pattern, or fiber washout from excessive resin flow
Broken Filaments	Caused by scratches or cuts, or a drill during hole drilling processes
Fiber Waviness or Kinking	Due to improper tensioning during prepreg preparation, filament winding, and pultrusion

SUMMARY

An understanding of the basic PMC material defects, which result from manufacture, is crucial for the prevention of property degradation and catastrophic failure. This article surveyed several of the common manufacturing-induced PMC materials defects.

NOTES & REFERENCES

* Polymeric materials are composed of several small repeating units known as monomers.

† Plastics are polymeric materials (usually organic) of large molecular weight that can be shaped by flow; the term plastic usually refers to the final product with fillers, plasticizers, pigments, and stabilizers included. Often, this term connotes thermoplastics.

‡ Resins are any class of solid or semi-solid organic products of natural or synthetic origin with no definite melting point. Resins generally have high molecular weights; most resins are polymers. The use of the term resin connotes a thermoset composite material.

§ The debulking process reduces the void content by removing the excess air contained within the composite. This process typically follows lay-up operations.

** Prepreg is shorthand for pre-impregnated material. A prepreg is a ready-to-mold material that is impregnated with a resin. The resin is usually partially cured to the B-stage and supplied to the fabricator, where it is formed into the desired shape and cured completely.[3]

†† In industry, stuck parts are typically discarded as a result of the damage incurred during removal.

‡‡ The glass transition temperature is the temperature at which the matrix changes from a glassy state to a viscous state.

§§ The terms void and pore are oftentimes used interchangeably. For the purposes of this article, voids refer to the empty spaces beneath the surface of a PMC. The empty spaces on the surface of the PMC are termed pores.

[1] Strong, Brent A., *Fundamentals of Composites Manufacturing: Materials, Methods, and Applications*, 2nd Edition, Society of Manufacturing Engineers, 2008.

[2] *ASM Handbook*, Volume 21: Composites, ASM International, 2001.

[3] Committee on High-Performance Structural Fibers for Advanced Polymer Matrix Composites, *High-Performance Structural Fibers for Advanced Polymer Matrix Composites*, The National Academies Press, 2005.

[4] Lemasçon, A., P. Castaing, and H. Mallard, "Failure Investigation of Polymer and Composite Material Structures in the Mechanical Engineering Industry," *Materials Characterization*, Vol. 36, 1996, pp. 309-319.

[5] Weeton, J.W., D.M. Peters, and K.L. Thomas, "Section I: Introduction to Composite Materials," *Engineers' Guide to Composite Materials*, American Society for Metals, 1987.

[6] Timmerman, J.F., B.S. Hayes, and J.C. Seferis, "Cure Temperature Effects on Cryogenic Microcracking of Polymer Matrix Materials," *Polymer Composites*, Vol. 24, No. 1, 2003.

[7] Wilkins, D.J., et al., *JTEC Panel Report on Advanced Manufacturing Technology for Polymer Composite Structures in Japan*, Loyola College, Baltimore, Maryland, 1994.

[8] Bickerton, Simon, et al., "Modeling Manufacturing Issues in Liquid Composite Molding Process," *Second Conference on NDE Applied to Process Control of Composite Fabrication*, NTIAC, 1996, pp. 49-60.

[9] Parlevliet, P.P., H.E.N. Bersee, and A. Beukers, "Residual Stresses in Thermoplastic Composites: A Study of the Literature – Part I: Formation of Residual Stresses," *Composites Part A: Applied Science and Manufacturing*, Vol. 37, 2006, pp. 1847-1857.

[10] Wisnom, M.R., M. Gigliotti, N. Ersoy, et al., "Mechanisms Generating Residual Stresses and Distortions During Manufacture of Polymer-Matrix Composite Structures," *Composites Part A: Applied Science and Manufacturing*, Vol. 37, 2006, pp. 522-529.

[11] Parlevliet, P.P., H.E.N. Bersee, and A. Beukers, "Residual Stresses in Thermoplastic Composites: A Study of the Literature – Part III: Effects of Thermal Residual Stresses," *Composites Part A: Applied Science and Manufacturing*, Vol. 38, 2007, pp. 1581-1596.

[12] Nairn, J.A., "Microcracking, Microcrack-Induced Delamination, and Longitudinal Splitting of Advanced Composite Structures," NASA-CR-4472, 1992.

[13] Wood, J.R., and M.G. Bader, "Void Control for Polymer-Matrix Composites (1): Theoretical and Experimental Methods for Determining the Growth and Collapse of Gas Bubbles," *Composites Manufacturing*, Vol. 5, No. 3, 1994.

[14] Matzkanin, G.A., and H.T. Yolken, "Techniques for the Nondestructive Evaluation of Polymer Matrix Composites," *AMMTIAC Quarterly*, Vol. 2, No. 4, 2007.

[15] Mallick, P.K., *Composites Engineering Handbook*, No. 14702, Marcel Dekker, Inc., 1997.

NDE for the Process Control of PMC Fabrication

H. Thomas Yolken
George A. Matzkanin
AMMTIAC
Austin, TX

INTRODUCTION

Polymer matrix composites (PMCs) provide properties superior to those of conventional materials due to their synergistic combination of high-performance fibers and matrices. In many instances, however, specialized processing operations are required to produce the unique microstructures and geometries that give PMCs their desirable properties and characteristics. Rejection rates tend to be higher than those for more conventional materials, and the unpredictable material property variations often prevent designers from utilizing these materials to their full potential. To mitigate these issues, a new method of manufacturing known as intelligent processing emerged in the 1990s.

Contrary to conventional automated processing, intelligent processing employs nondestructive evaluation (NDE) sensors to characterize the material being manufactured in real time, rather than using sensors to monitor certain process variables such as temperature and pressure. Using the data from these in-process NDE sensors, the process can be optimized, placing the material properties under closed-loop control and the process variables under adaptive control. This method "builds in quality" and evades the high costs associated with the rejection of fully processed materials or parts. This is in contrast to conventional automated processing, where controllers maintain the desired preset process variables, and NDE techniques are used after manufacture to "inspect in quality."

PMC MANUFACTURING PROCESS CONTROL PARAMETERS

Polymer matrix composites are manufactured using a wide range of technologies that depend upon resin type, fiber type, and end use application. The most common methods include spray lay-up; hand lay-up; ply cutting and stacking, in support of hand lay-up operations; automated tape lay-up; filament winding; tow placement; pultrusion; liquid composite molding (i.e., resin transfer molding (RTM), structural reaction injection molding (SRIM), and injection compression molding (ICM)); thermoforming; curing; and forming, stamping, injection molding, and rolling.

The quality of the PMCs that result from these manufacturing processes can be controlled by regulating the cure (thermosetting resins only), resin flow, porosity and voids, fiber and matrix distribution, fiber volume fraction, fiber orientation, fiber waviness, and fiber placement.

Cure: Fiber-reinforced PMCs are typically manufactured using thermosetting resins. These resins require a cure cycle to transform the short linear and branched polymer molecules into a single three-dimensional (3-D) network of cross-linked chains, producing a solid material.

Cure cycle improvements can enhance the fabrication time and the overall quality of the end product and reduce the operational costs. Although analytical models can be used to determine the optimum processing conditions, batch to batch variations in the properties of the input materials cannot be accounted for using these methods. To obtain optimum processing conditions, a system is needed that selects and controls the processing conditions in real time. Figure 1 shows a common laminated thermoset polymer matrix composite (PMC) cure cycle.[1] The cure cycle is dependent upon the rate of the temperature increases, the temperature of the curing plateau, the time at which pressure is applied, and the post curing temperature and pressure.[2]

Resin Flow and Mold Fill: Liquid composite molding (LCM) depends on the rates of resin flow and mold fill. To achieve parts that have the matrix resin fully infiltrating the preform, proper mold fill, with either 2- or 3-D preforms, is required. Mold fill is critically dependent on resin flow and impregnation. Unsuccessful mold filling can lead to the formation of macroscopic and microscopic voids.

When multi-layer preforms are used to make thick parts, the mold filling process becomes much more complex since the preform has a 3-D nature. In thick parts, variations in the preforms and the resin can affect flow rate. Pressure gradient, fluid viscosity, and the fiber preform permeability can all be correlated to the flow rate of the resin using Darcy's Law. Darcy's Law is typically utilized in the codes for mold filling simulations.[3]

Porosity and Voids: Pores can be detrimental to the performance of a PMC, leaving regions of unsupported fibers and areas of stress concentration. Porosity leads to a decreased density, modulus of elasticity, and strength.[4] Whether in the form of distributed voids within the matrix, between plies, or at the fiber matrix interface, porosity is a perennial problem in composite manufacturing, especially for laminated structures such as carbon fiber reinforced PMCs.

Fiber and Matrix Distribution: The fiber and matrix distribution is critical to the performance of a composite structure. Knowledge of the size and location of matrix-rich and matrix-starved regions provides important information, which can be used in finite element codes to calculate performance influences and to adjust processes.

Fiber Volume Fraction: Strength is determined largely by the interaction between the fibers and the matrix. Since the matrix distributes the load onto and between the fibers, it is important to know and control the respective fiber volume fraction.

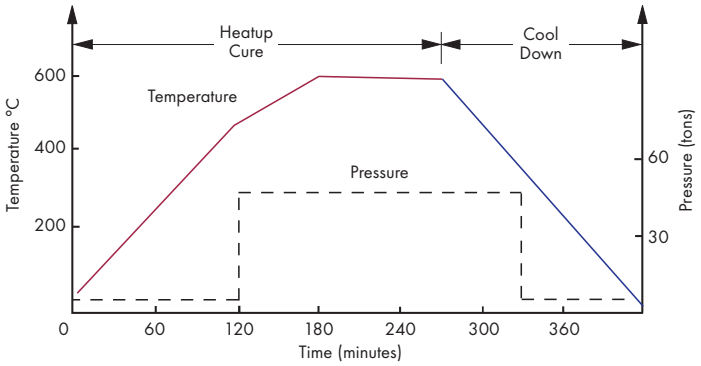

Figure 1. Laminated thermoset PMC cure cycle.[1]

Fiber Orientation: In continuous fiber reinforced PMCs, the fiber orientation should be carefully controlled. If not properly aligned, further issues could result during ply lay-up. For instance, a variation of 10° in the ply* orientation can result in a 30% decrease in the stiffness of a composite laminate.

Fiber Waviness: Fiber waviness is a manufacturing defect that causes a through-thickness undulation in the fibers of a thick section PMC. Fiber waviness can occur during filament winding since the overwrapped layers place stresses upon the wet hoop-wound filaments. This defect can also be introduced through the buckling of a pre-impregnated material (prepreg) or during the cure cycle as a result of residual stress buildup. Fiber waviness can cause a significant reduction in the strength and stiffness of the final product.

Fiber Placement: Laminated composite parts can be fabricated using automated tow† placement to save time and decrease production costs. Tows must be placed flush to one another with no space or overlap; overlaps or gaps can reduce the mechanical strength to a value below the design specification.

NDE SENSORS FOR PROCESS CONTROL

The following NDE methods are suitable for the in-process monitoring and control of PMC manufacturing processes.

Ultrasonics/Acoustics: Ultrasonic testing is the most widely used NDE method for inspecting PMCs during manufacturing, after manufacturing, and while in-service. Ultrasonics can detect and evaluate delaminations, voids and porosity, and at times broken fibers and ply slippage.[5, 6]

Acousto-ultrasonics and acoustic emissions testing methods have been used to inspect composites at bonded joints and to locate failure sites, respectively.[7, 8]

Radiography: X-ray radiography is used to nondestructively evaluate PMCs after manufacture and while in-service. The development of digital radiography detectors has led to continued improvements in the digital radiography and computed tomography of PMCs. Digital radiography can be used in real time, or near-real time, to provide feedback on operations such as lay-up, consolidation, and curing.[9]

Thermography: Thermography maps regions of equal temperature (isotherms) on a surface. There are several different types of thermography, categorized as contacting or non-contacting, with either active or passive heating methods. Thermography inspects for disbands in adhesive joints, delaminations, and inclusions.

Optical and Spectroscopic: There are a number of optical and spectroscopic NDE techniques that are used to inspect PMCs after manufacture and while in-service. These techniques include: visual, penetrants, photoelasticity, coherent light, holography, laser shearography, and embedded optical fibers. Several of these techniques are also applicable for PMC process monitoring, especially fiber optic strain sensors. One demonstration used an in-situ fiber optic strain sensor, coupled to a miniature strain sensor, to monitor the changing rheology of a curing resin and thus track the cure cycle progression.[10]

Optical imaging and scattering techniques have also been used for the in-process monitoring of PMC manufacture. Laser optical triangulation has been utilized in measuring the gap and tow width during automated layup.[11]

Electromagnetic: Microwave NDE in the frequency range from 225 megahertz (MHz) to 100 gigahertz (GHz) is sensitive to the dielectric properties of PMCs and is particularly effective in monitoring their internal structure (fiber orientation), resin-rich or resin-poor areas, the state of cure, moisture content, porosity, thickness, and surface waviness. Microwave sensors have been used to monitor resin curing and porosity.[12]

ON-LINE PROCESS CONTROL APPLICATIONS

NDE methods are most commonly used to monitor the state of resin cure, void formation, resin flow and mold fill operations, and reinforcement placement. The technologies that have been developed to monitor each of these processes are discussed.

Monitoring the Resin Cure Cycle

A commercial ultrasonic system for the in-process monitoring and control of the cure cycle has been developed to monitor in-mold PMCs at temperatures below 260°C. The temperature and ultrasonic sound speed responses of this system are shown in Figure 2 for an epoxy-graphite fiber prepreg during a compression molding process. The changes in the ultrasonic sound speed directly correlate to the cure cycle progression. For the example in Figure 2, the minimum in sound speed occurs as the temperature cycle enters a 121°C hold period. This is followed by an increase in sound speed as the temperature is increased to 177°C. The rate of increase in sound speed slows as the cure reaction nears completion.[13]

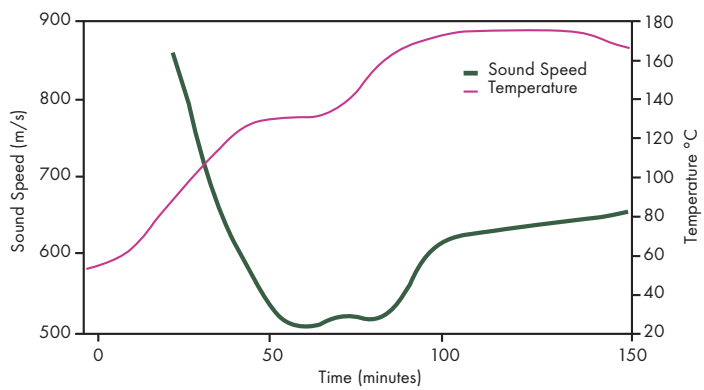

Figure 2. The changes in ultrasonic sound speed and temperature for an epoxy-graphite fiber prepreg during a compression molding process.[13]

Embedded acoustic wave-guides have also been employed to monitor the state of cure in PMCs in this work; the transmission velocity of an acoustic signal within the wave-guide at final cure was measured, revealing the final acoustic impedance (density multiplied by wave velocity) of the host composite. Since the velocity of sound is directly proportional to the square root of the bulk modulus and inversely proportional to the square root of the density and Poisson's Ratio, the acoustic wave-guide sound velocity is a relative measure of the material modulus. In turn, these quantities are all related to the material's state of cure and ultimately the internal residual stresses.[14]

Differences in the residual strain within the composite were also measured by embedding several identical acoustic wave-guides in a composite part and determining the differences in acoustic wave-guide sound speed. Figure 3 shows the system used for the acoustic wave-guide cure and stress monitoring of composites. Although these embedded wave guides are effective as cure cycle monitors, their use has been avoided in the past, as some view the wave-guides as defects or inclusions.[14]

Embedded electrodes have been developed to obtain dielectric

http://ammtiac.alionscience.com/quarterly

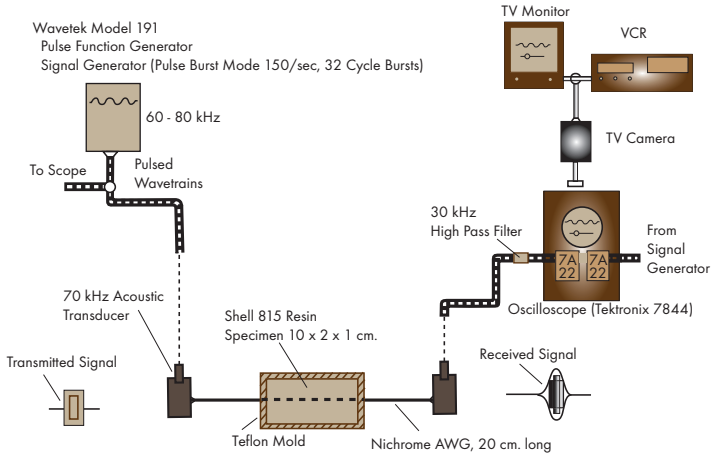

Figure 3. **Schematic of the system used for the acoustic wave-guide cure and stress monitoring of composites.[14]**

measurements as a means of monitoring the cure rate of resins as well. The dielectric properties of a resin typically vary over a large range as the resin cures.[15, 16] These embedded electrodes are also seen by some as defects, limiting the use of this method in production process control. Nevertheless, this method has found widespread use in process design and optimization.

Microwave-based nondestructive methods that measure the permittivity and permeability of a composite during cure have been developed to indicate whether the fully cured material will have the desired properties. It is important to tightly control the complex permittivity and permeability of PMCs that are to be used for particular electromagnetic applications, such as shielding or absorption of electromagnetic radiation. Often, however, the electromagnetic parameters depend on the environment in which the PMC is cured.[17]

Monitoring Void Formation

Laser ultrasonic methods have been used to nondestructively quantify graphite-epoxy porosity when only one surface of a sample, or product, is available. This method enables the inspection of PMC porosity both during fabrication and while in-service.[18]

Infrared thermography has also demonstrated capabilities for the in-process monitoring and control of porosity during thermoplastic composite fabrication. This method focuses on thermoplastic automated tow placement as a means for minimizing surface porosity.[19]

Monitoring Resin Flow and Mold Fill

Electromagnetic NDE sensors have been developed to monitor the real-time flow of resin into molds during the RTM process. These sensors consist of two planes of electrically conducting threads placed in an orthogonal, non-conducting grid that are separated by plies of insulating preform. They are typically arranged such that the location of the resin can be determined. As the resin fills the preform, the two planes of sensors form a series of connected electrical circuits that can be easily monitored using a 12-volt DC current.[20] These sensors were used during the production of the Army XM194 Ballistic Shield (a thick section composite which protects part of the 155-mm cannon) to monitor the flow-front in the mold and control the inlet and vacuum ports of the process.[21]

Ultrasonic techniques have also been used to monitor the flow-front during RTM mold filling operations. With this method, a laser is used to generate ultrasonic waves, which are then detected using a Fabry-Perot interferometer or laser probe. Figure 4 shows a schematic of the mold geometry and the key reflected ultrasonic pulses for the in-situ monitoring of this RTM process.[22]

Ultrasonics have been used for the in-process analysis of polymer melts as well. Ultrasonic monitoring of polymer melts can improve quality, enhance process control, and enable new materials with specific properties to be produced. In-process ultrasonic analysis techniques that accurately measure melt viscosity, filler content, and molecular weight have been demonstrated. With this technology, ultrasonic pulses, from 2 MHz to 10 MHz, are guided into and out of the polymer melt by metal buffer rods that protect the transducer from heat and pressure damage. A second transducer receives the transmitted sound that echoes after passage through the melt. These signals are amplified and digitized. The time of flight and amplitude are extracted and used to calculate the velocity and attenuation of the ultrasonic pulses via correlation techniques. A calibration model combines the ultrasound results with temperature and pressure data to calculate the material properties. This ultrasonic polymer analysis technology has been demonstrated in many polymer manufacturing and production processes. A wide variety of property measurements have been made in real time with excellent precision relative to laboratory analysis methods.[23]

Monitoring Reinforcement Placement

Optical imaging, based on video camera technology, has been successfully utilized to monitor a commercial 3-D automated braiding process. Three video cameras, each with 120° of coverage, were used to obtain a total 360° of coverage. A commercial frame grabber-video array processor and a desktop computer were used for the data processing activities. A block diagram of this video imaging system is shown in Figure 5.[24]

Eddy current NDE has been coupled with a horseshoe type probe to determine fiber orientation, and it has been proven useful in monitoring the cure of graphite epoxy composite laminates.[18] In order to use eddy current NDE, however, the PMCs must have

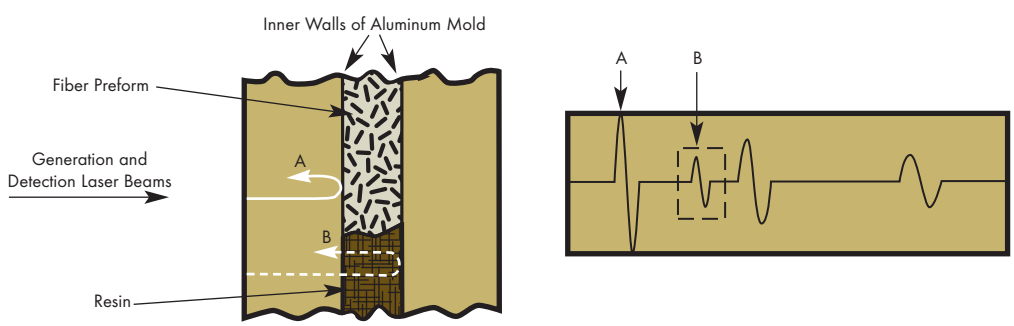

Figure 4. **A schematic of the mold geometry and key reflected ultrasonic pulses for the in-situ monitoring of RTM process.[22]**

http://ammtiac.alionscience.com/quarterly

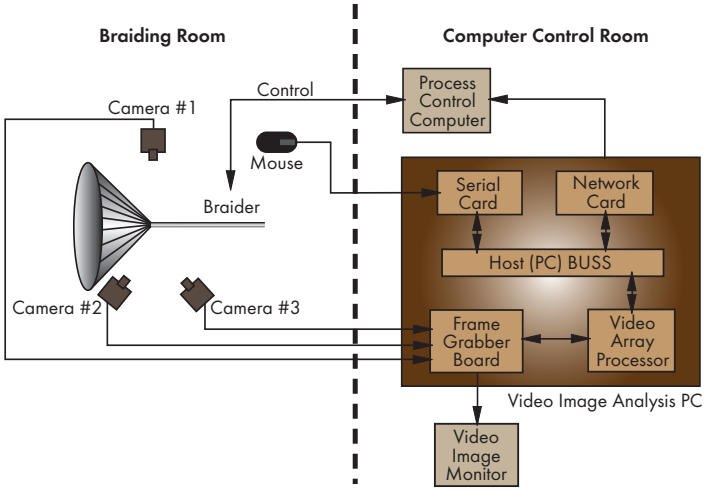

Figure 6. Video System Block Diagram.[23]

a high concentration of electrically conducting fibers (e.g., carbon or boron), since the fibers establish a continuous conducting path that enable the movement of eddy currents.

CONCLUSIONS

NDE is playing an important role throughout the life cycle of PMCs from the design of parts to process optimization. NDE techniques are used for in-process control, after manufacturing inspection, and in-service inspection. This article discussed NDE techniques for the in-process monitoring of PMC fabrication, specifically of the resin cure cycle, void formation, resin flow and mold fill, and reinforcement placement.

The resin cure cycle can be monitored using ultrasonic wave propagation techniques based on contact transducers, non-contacting lasers, and embedded wave-guides; dielectric measuring equipment using embedded electrodes; and microwave sensing. Void formation has been monitored using contact ultrasonics with traditional transducers, non-contact ultrasonics utilizing laser-based techniques, and lock-in infrared thermography using rugged equipment. Electrical circuit type sensors and embedded optical fibers are capable of monitoring resin flow and mold fill. Reinforcement placement monitoring uses optical imaging with computer image processing and contact ultrasonics.

It is expected that, as composite parts continue to become larger and more complex, the demands for in-process NDE sensing techniques will continue to expand.

REFERENCES

* A ply is a piece of laminate used to capture the features of a 3-D object. Plies are often placed atop one another in differing directions to give the component the desired properties.

† A tow is an untwisted bundle of continuous fibers.

[1] Sih, G.C., A. Carpinteri, and G. Surace, *Advanced Technology for Design and Fabrication of Composite Materials and Structures*, Kluwer Academic Publishers, 1995, pp. 1-14.

[2] Geier, M.H., *Quality Handbook for Composite Materials*, Chapman & Hall, 1994.

[3] Bickerton, S., et al., "Modeling Manufacturing Issues in Liquid Composite Molding Processing," *Second Conference on NDE Applied to Process Control of Composite Fabrication*, NTIAC, 1996, pp. 49-60.

[4] Kardos, J.K., R. Dave, and M.P. Dudukovic, "Voids In Composites," *Proceedings of Manufacturing Int.*, 1988, pp. 41-48.

[5] Parker, I., "Looking Inside a Structure," *Aerospace Composite Materials*, May/June 1989, pp. 14-22.

[6] Leonard, L., "Inside Story on Composites: NDI Looks Sharp," *Advanced Composites*, Vol. 56, January/February, 1990.

[7] Talreja, R., "Application of Acousto-Ultrasonics to Quality Control and Damage Assessment in Composites," *4th Int. Conference Composites Structures*, 1987.

[8] Drouillard, T.F., "A Comprehensive Guide to Literature on AE From Composites," *Proceedings 3rd International Symposium Acoustic Emission Reinforced Composites*, Supplement II, July 1989, RFP-4297.

[9] Yancey, R.N., and C. Mitchell, "Nondestructive Evaluation of Composites Using Digital Radiography and Computed Tomography," *Conference Proceedings: Nondestructive Evaluation Applied To Process Control of Composite Fabrication*, NTIAC, 1994, pp. 111-114.

[10] May, R.G., and R.O. Claus, "In-Situ Fiber Optic Sensor for Composite Cure Monitoring Through Characterization of Resin Viscoelasticity," *SPIE*, Vol. 2948, 1996, pp. 24-34.

[11] Folsom, T.C., "A Sensor to Measure Gap Width During Fiber Placement," *Second Conference on NDE Applied to Process Control of Composite Fabrication*, 1996, pp. 93-102.

[12] Zoughi, R., and S.I. Ganchev, "Application of Microwave Nondestructive Testing and Evaluation to Thick Composites," *Conference Proceedings: Nondestructive Evaluation Applied To Process Control of Composite Fabrication*, NTIAC, 1994, pp. 77-90.

[13] Shepard, D.D., and K.R. Smith, "A Complete Ultrasonic Measurement System for In-Process Cure Monitoring and Control of Composites," *Second Conference on NDE Applied to Process Control of Composite Fabrication*, NTIAC, 1996, pp. 61-68.

[14] Harrold, R.T., et al., *SPIE Proceedings: Nondestructive Evaluation for Process Control in Manufacturing*, Vol. 2948, 1996, pp. 12-23.

[15] Senturia, S.D., and N.F. Sheppard, "Dielectric Analysis of Thermoset Cure," *Advanced Polymer Science*, Vol. 80, 1986, pp. 1-47.

[16] Rice, B.P., and C.W. Lee, "Novel, Low-Cost Sensors for Intelligent Process Control," *41st International SAMPE Symposium*, March 1996, pp. 1518-1529.

[17] Bowler, N., and E.R. Abram, "Monitoring the Effect of Relative Humidity During Curing on Dielectric Properties of Composites at Microwave Frequencies," *Review of Quantitative Nondestructive Evaluation*, Vol. 25, 2006, pp. 469-476.

[18] Karabutov, A.A., I.M. Pelivanov, and N.B. Podymova, "Laser Optoacoustic Method for Nondestructive Porosity Evaluation of Graphite-Epoxy Composites," *SPIE*, Vol. 6162, 2005.

[19] Steiner, K.V., et al., "Infrared Thermography and Laser-Based Ultrasonic Methods for On-Line Porosity Sensing During Thermoplastic Composites Fabrication," *Second Conference on NDE Applied to Process Control of Composite Fabrication*, NTIAC, 1996, pp. 115-122.

[20] Walsh, S.M., "In-Situ Sensor Method and Device," *US Patent: 5,210,499* (May 1993).

[21] DuBois, C.J., S. Malghan, W.O. Ballata, and S. Walsh, "Resin Flow Sensing: A Precursor to Successful Composite Control," *Conference Proceedings: Second Conference on NDE Applied to Process Control of Composite Fabrication*, October 1996, pp. 81-92.

[22] McKie, A.D.W., R.C. Addison, Jr., and L.T. Liao, "In-Situ Process Monitoring Using Laser-Based Ultrasonics," *Conference Proceedings Nondestructive Evaluation Applied to Process Control of Composite Fabrication*, NTIAC, 1994, pp. 115-126.

[23] Seto, D., and W. Weber, "Developments in Using Ultrasound for QNDE of Polymer Melts," *Review of Quantitative Nondestructive Evaluation*, Vol. 21, 2002, pp. 1727-1734.

[24] Cauffman, S., R. Brown, and A. Bartos, "Video Monitoring of a Large-Scale Commercial Three Dimensional Braider for Advanced Composite Preform Process Control," *Conference Proceedings Nondestructive Evaluation Applied to Process Control of Composite Fabrication*, NTIAC, 1994, pp. 127-142.

To comment on this article, email: ammtiac@alionscience.com

AMMTIAC Directory

Technical Manager/COR
Dr. Khershed Cooper
Naval Research Laboratory
Code 6354
4555 Overlook Ave, SW
Washington, DC 20375
202.767.0181
Email: cooper@anvil.nrl.navy.mil

Defense Technical Information Center (DTIC) POC
Glenda Smith, DTIC-I
8725 John J. Kingman Road, Ste 0944
Ft. Belvoir, VA 22060-6218
703.767.9127, Fax: 703.767.9174
Email: gsmith@dtic.mil

AMMTIAC Director
Micheal J. Morgan
201 Mill Street
Rome, NY 13440-6916
937.431.9322 x103, Fax: 315.339.7107
Email: mmorgan@alionscience.com

AMMTIAC Deputy Director
Christian E. Grethlein, P.E.
201 Mill Street
Rome, NY 13440-6916
315.339.7009, Fax: 315.339.7107
Email: cgrethlein@alionscience.com

Contracts Facilitator
Judy E. Tallarino
201 Mill Street
Rome, NY 13440-6916
315.339.7092, Fax: 315.339.7107
Email: jtallarino@alionscience.com

Technical Inquiry Services Manager
Owen R. Conniff
201 Mill Street
Rome, NY 13440-6916
315.339.7026, Fax: 315.339.7107
Email: oconniff@alionscience.com

Materials Technical Director
Jeffrey D. Guthrie
201 Mill Street
Rome, NY 13440-6916
315.339.7058, Fax: 315.339.7107
Email: jguthrie@alionscience.com

Manufacturing Technical Director
Christian E. Grethlein, P.E.
201 Mill Street
Rome, NY 13440-6916
315.339.7009, Fax: 315.339.7107
Email: cgrethlein@alionscience.com

Non-Destructive Evaluation and Testing Technical Director
David S. Forsyth
9063 Bee Caves Road
Austin, TX 78733-6201
512.263.2101 x223, Fax: 512.263.3530
Email: dforsyth@tri-austin.com

Mark Your Calendar ✓

1 2 3 4 5 6 7 8 9 10 11 12 13 14 15 16 17 18 19 20 21 22 23 24 25 26 27 28 29 30 31

For a listing of upcoming materials, manufacturing & testing related events, please visit our website:
http://ammtiac.alionscience.com/calendar

Power & Energy Solutions

- Sustainability engineering
- Power Sources Supply Chain Analysis and Optimization
- Microgrid Technology and Selection of Optimal Alternative Energy Systems
- Energy Outreach, Awareness, and Training Products & Services
- Life cycle cost modeling and analysis
- Renewable Energy Technology Evaluations

AMMTIAC

call 315.339.7090 or
visit http://ammtiac.alionscience.com